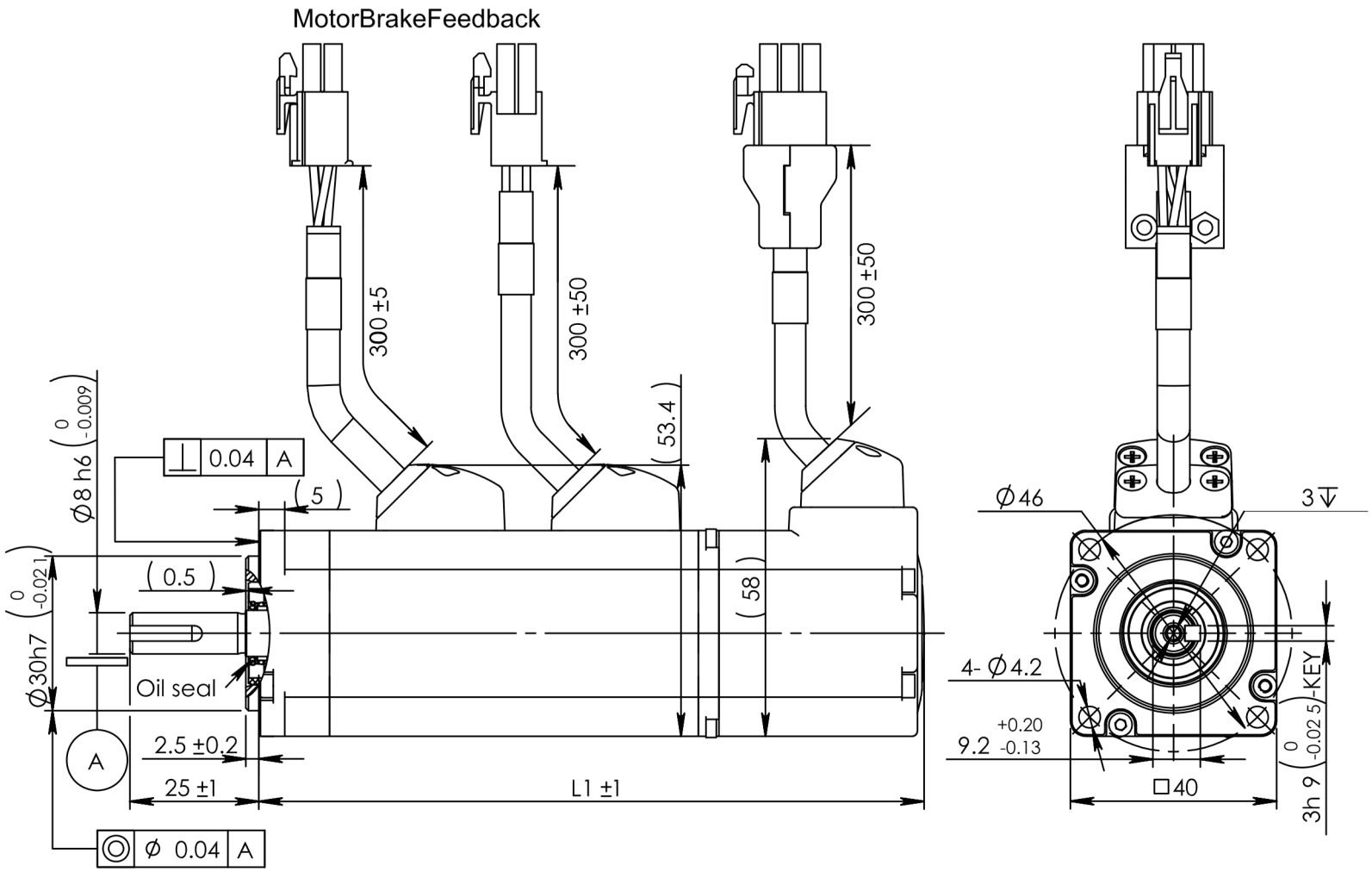

L1 (mm)	
SM0401□E4-KCD-BNV	129
SM0402□E4-KCD-BNV	147

A0	Mark	Quantity	Revision No.	
Design			Process	Date
Audit			Check	
			Approve	

60W SM0401□E4-KCD-BNV
100W SM0402□E4-KCD-BNV

Drawing stage	Weight	Scale

Sheet 1 of 1